Gamma-ray Large Area Space Telescope (GLAST)

Science Instrument - Spacecraft Interface Requirements Document

August 3, 1999

Revision History

Version	Description	Date
0.1	Initial draft released with draft AO.	1/26/99
0.2	Revised per comments to draft AO.	4/14/99
0.3	Updated section 2, and paragraphs 3.2.2.7.2, 3.2.3.1, 3.2.3.2.2, 3.2.4.7, and 3.2.5.2.7 for AO release.	8/3/99

Table of Contents

List of Figures

List of Tables

List of Acronyms

ACS	Attitude Control Subsystem
bps	bits per second
C	Centigrade
CDHS	Command and Data Handling Subsystem
CG	Center of Gravity
Dec	Declination
g	gravity
GRB	Gamma-Ray Burst
GSFC	Goddard Space Flight Center
Hz	Hertz
IDEAS	Interactive Design Engineering Analysis System
IR	Infrared
k	kilo
kg	kilogram
LET	Linear Energy Transfer
m	meter
mm	millimeter
M	Mega
MECO	Main Engine Cut Off
Mil Std	Military Standard
PPS	Pulse Per Second
RA	Right Ascension
RSS	Root Sum Squared
RT	Remote Terminal
SC	Spacecraft
SEIT	System Engineering, Integration and Test
SI	Science Instrument
SINDA	System Improved Numerical Differencing Analyzer
sr	Steradian
SSR	Solid State Recorder
TBR	To Be Resolved
TBD	To Be Determined
TDRS	Tracking and Data Relay System
TRASYS	Thermal Radiation Analysis System
TSS	Thermal Synthesizer System
UTC	Universal Coordinated Time
V	Volt
W	Watt

1 Introduction

This document provides generic interface requirements and design guidance for the GLAST flight system. It envelopes the accommodation requirements of either of two GLAST primary instrument concepts as presented at the GLAST Mission Concept Review, or of any other instrument concept that may be proposed. In the future, these interface requirements will be revised to accommodate a specific instrument and will be developed in greater depth subsequent to instrument selection. Until that time only top-level physical and functional interfaces are addressed. It is anticipated that the project will select the Delta 7920-10 as its baseline launch vehicle. In the mean time, since both instrument and spacecraft have direct interfaces with the launch vehicle, interface constraints with the launch vehicle are specified by means of project allocations.

The specification is written for interfaces between the primary science instrument (SI) and spacecraft (SC) as modular systems that are delivered by separate organizational entities. A third party role is also recognized, that of system engineering, integration, and test. During the 3-year period of project formulation, and possibly during the subsequent period of project implementation, the Project Office at GSFC will perform this function.

Although this document is not under formal configuration control during the formulation period, the requirements are none-the-less stated as mandatory “shall” requirements.

2 Applicable Documents

Requirements in this Specification are traceable to the following documents:

GLAST Science Requirements Document Draft, May, 1999

GLAST Mission System Specification Draft, May, 1999

GLAST Mission Concept Review Presentation Package, September 28, 1998

Delta II Payload Planners Guide http://www.boeing.com/defense-space/space/delta/delta2/guide/index.htm

GEVS-SE Rev A General Environmental Verification Specification for STS & ELV Payloads, Subsystems, and Components http://arioch.gsfc.nasa.gov/302/gevs-se/toc.htm

CCSDS 102.0-B-4 Recommendation for Space Data Systems Standards. Packet Telemetry http://www.ccsds.org/publications.html - telemetry

CCSDS 202.0-B-2 Recommendation for Space Data Systems Standards. Telecommand, Part 2: Data Routing Service http://www.ccsds.org/publications.html - telecommand

NASA HDBK 4001. Electrical Grounding Architecture for Unmanned Spacecraft, February 17, 1998
http://starbase.msfc.nasa.gov/TSL/dispsearch.htm?agency=NASA&disp=E

NSS 1740.14. NASA Safety Standard, Guidelines and Assessment Procedures for Limiting Orbital Debri, August 1995
http://sn-callisto.jsc.nasa.gov/mitigate/mitigation.html

3 Requirements

3.1 Definition of Flight Systems

3.1.1 System and Subsystem Definitions

3.1.1.1 System Modules

The Flight System is comprised of 2 modules, a spacecraft module and an instrument module. Figure 3-1 shows the spacecraft module with 2 candidate instrument modules.

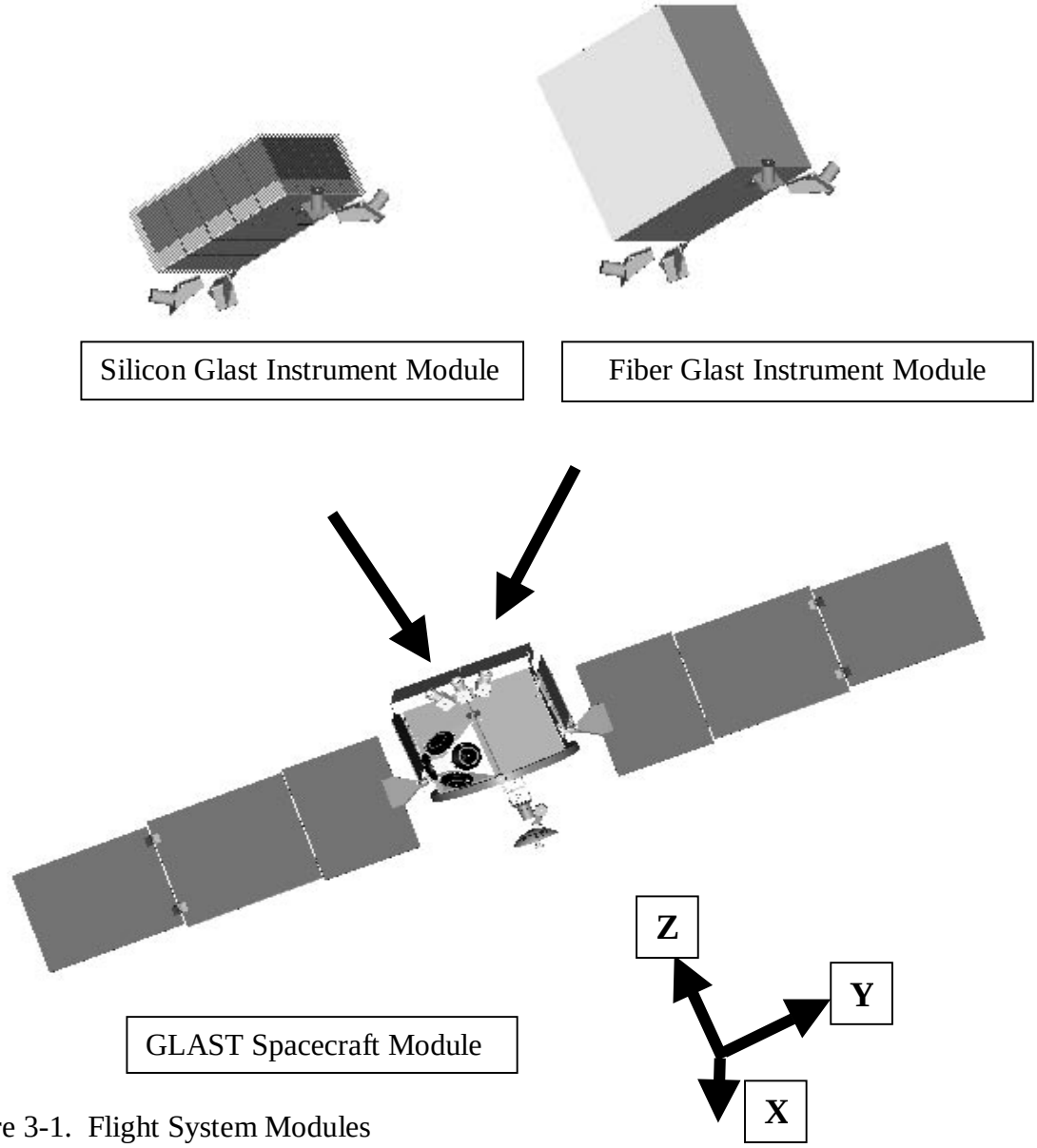

Figure 3-1. Flight System Modules

3.1.1.2 System Elements

The N-squared (N^2) chart below is used to show the interface context of the GLAST system elements. System elements are located on the diagonal and their interface relationships off the diagonal. Interface relationships from one element to another proceed in clockwise fashion (over to the right and down or over to the left and up). For example, the spacecraft transmits a physical environment and functional commands to the science instrument, while the science instrument presents physical accommodation requirements and data to the spacecraft. It is seen that the complete set of interfaces for the SC or the SI includes interfaces from other elements as well. The distinction between physical and functional can be problematic. "Physical" generally refers to mechanical contact, while "functional" generally refers to time sequenced data flows or signals. These system definition and interface relationships are the basis for the interface requirements in this document.

Space Environment		Physical	Physical	
	Launch Vehicle	Physical Constraints, Launch Environment	Physical Constraints, Launch Environment	
		Spacecraft	Physical Environment, Functional	Functional
		Physical Accommodation, Functional	**Science Instrument**	
		Functional		**Space-Ground Link**

Figure 3-2. N^2 Chart for System Elements

3.1.1.3 Subsystem Definitions

In the N^2 chart shown in Figure 3-3, the 3 central systems, Launch Vehicle, Spacecraft, and Science Instrument are further decomposed into their respective subsystems, and, the external interfaces, those that cross major system boundaries, are identified between subsystems. Some instrument subsystems that are defined functionally may be combined in implementation. Two cases are tracker and calorimeter, and data-acquisition-processing and command-telemetry. Implicit in the selection of the affected subsystem is a notion of how requirements flow down within a major system, but this will not be discussed here. As before, transmission requirements flow down from above the diagonal and accommodation and response requirements flow up from below the diagonal. The interface requirements are detailed in the remainder of this document

Boosters, 1st&2nd Stages			Loads												
	Payload Attach Fitting		Loads, Config				Tip Off		Sep Sw						
		Fairing	Envel					Envel	Sep Sw						
			Structure incl Instrument Interface Structure												
				Thermal											
					Command & Data Handling									Cmds	
						Communications incl antenna deployable									
							Guidance & Control								
								Power incl solar array deployable							
									Electrical incl harness, power distribution, and grounding						Bus V,I Config, EMC
										Anti-coincidence					
											Tracker				
												Calorimeter			
					Data								Data Acquisition and Processing		
					Status									Command and Telemetry	
									Power						Power
			Mass, Config												
			Radiator Accom	Heat Dissip											

Figure 3-3. N^2 Chart for Subsystems

3.2 Interface Requirements and Constraints

3.2.1 General Interface Requirements

3.2.1.1 Axes Definitions

The SI and SC shall use a common definition of right handed orthogonal axes as shown previously in Figure 3-1. The Z-axis passes through the geometric center of SI and SC. This axis is defined as the boresight axis of the observatory. The Y-axis is perpendicular to the Z-axis and is aligned with the axis of solar array rotation. The X-axis is orthogonal to the Y and Z-axes.

3.2.1.2 Celestial Coordinates

The observatory shall use celestial coordinates relative to the J2000 coordinate frame. Pointing commands to the observatory and pointing directions reported by the observatory shall be by Right Ascension (RA) and Declination (Dec) in J2000 coordinates.

3.2.1.3 Pointing Knowledge Error Budget

The pointing error budget for the Observatory that is given in Table 3-1 relates SI and SC design requirements to the system pointing requirement. This table provides allocations based on the best source location capability of the SI (1-5 arcmin). Pointing knowledge is defined as the uncertainty in the determination of the current pointing direction.

Table 3-1 Observatory Pointing Knowledge Error Budget

Observatory	70 arcsec (TBR)
SI Source Location Determination	60 arcsec
SC Attitude Determination	30 arcsec (TBR)
SC Mechanical/Thermal Alignment	20 arcsec (TBR)

The Observatory pointing knowledge is the system error that is comprised of the RSS of the SI and SC error components. SI Source Location Determination is the smallest uncertainty in determining the angular direction of the source over the required measurement energy range. SC Attitude Determination includes sensor accuracy and any timing error at the time of measurement. SC Mechanical/Thermal Alignment includes error contributions from alignment measurement uncertainty, launch shift, zero gravity release, and on-orbit mechanical disturbances and thermal distortions.

3.2.1.4 Math Models

Mathematical models shall be readily exchanged electronically between the SI and SC contractors and the GSFC. This requires the use of common design tools and versions for file format compatibility. Alternate formats are acceptable only when approved by the Project Office. Mechanical design shall use the IDEAS Master Series Version TBD format. Thermal geometric models shall be developed in TRASYS or TSS format, and thermal lumped mass models shall use the SINDA finite difference computer program.

3.2.2 Mechanical

3.2.2.1 Fairing Envelope Constraint

The maximum lateral, X-Y, dimensions of the SI shall be constrained to 1.8 m, as shown in mm in Figure 3-4. Note that the clearance between SI and fairing is reserved for solar arrays. The maximum Z dimension of the SI shall be constrained to 3.15 m. The Z dimension is based on an overall maximum height of 4.55 m for the observatory in the 3-m fairing of the Delta II, and an allocation of 1.4 m for the SC.

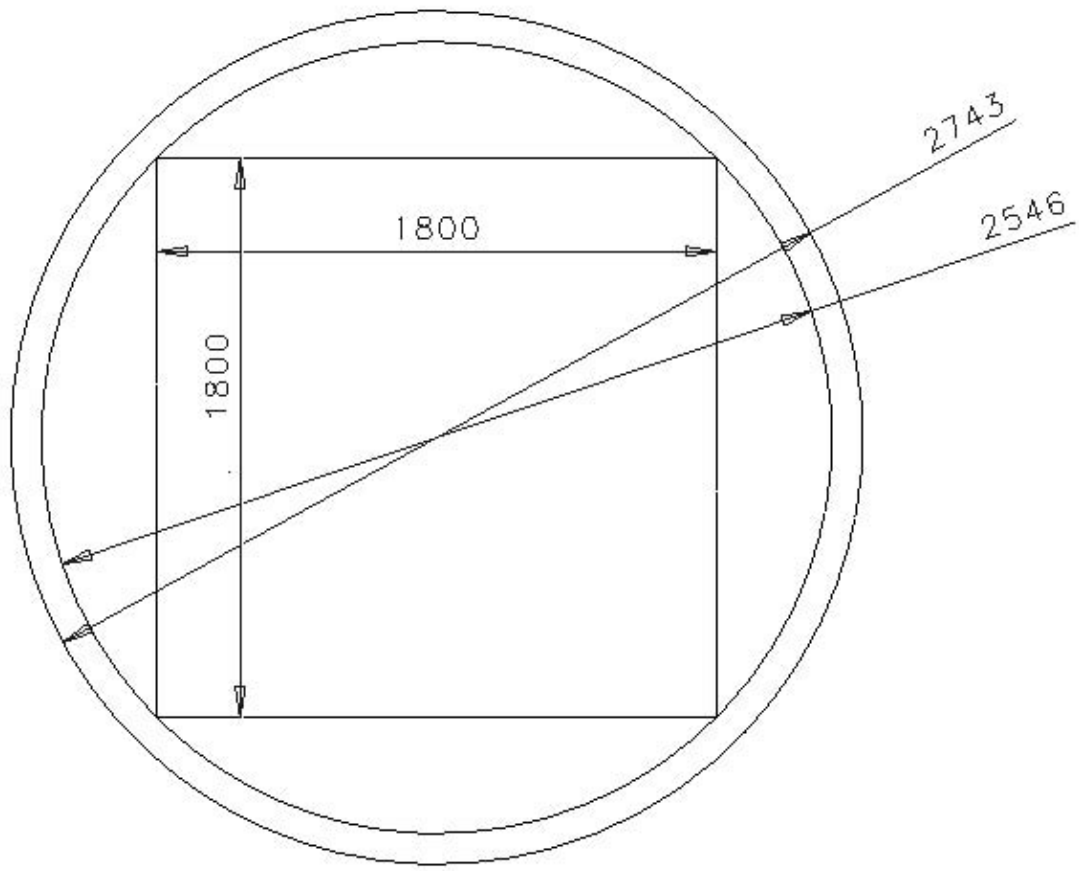

Figure 3-4. Fairing Diameter Constraint

3.2.2.2 Mass Constraint

The maximum launch mass of the SI shall be constrained to 3000 kg. This is exclusive of the instrument interface structure but inclusive of any SI hardware mounted on the SC bus, such as thermal radiators and electronics boxes.

3.2.2.3 Instrument Interface Structure

An interface structure shall adapt the structural configuration of the SI to that of the SC and provide mounting support for the SI. It shall accommodate the routing of electrical

cables and dedicated thermal links between the SC and SI. This interface structure will be provided by the SC contractor.

3.2.2.4 CG Envelope

The Center of Gravity (CG) envelope that is given in this section is based on maximum values for the parameters given below and the configuration that is shown in Figure 3-5. In this figure, the Instrument Interface Plane is essentially the mass boundary of the SI and not necessarily the plane of attachment.

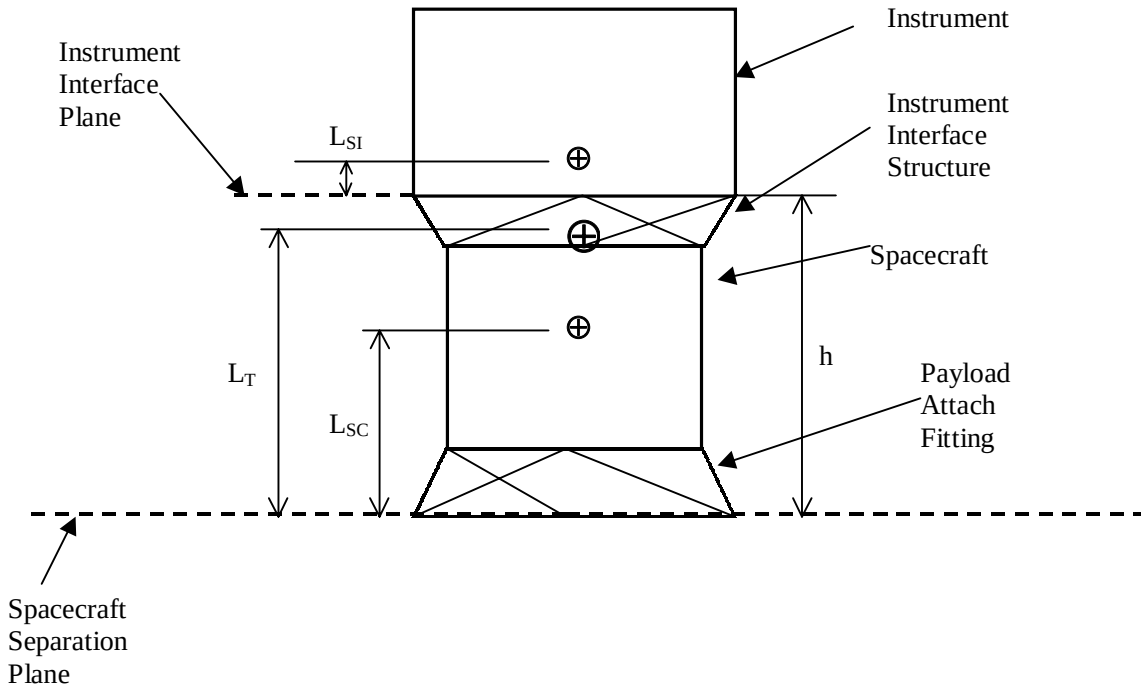

Figure 3-5. Observatory Configuration

The distances in Figure 3-5 are defined as:

L_T = Distance from launch vehicle separation plane to observatory CG
L_{SC} = Distance from launch vehicle separation plane to S/C CG
L_{SI} = Distance from SI interface plane to SI CG
h = Height of S/C including instrument interface structure and PAF

The value of L_{SI} is calculated from:

$$L_{SI} = \frac{F_T L_T - F_{SC} L_{SC}}{F_{SI}} - h$$

where the forces are determined from the known masses of each component.

The plot shown in Figure 3-6 is based on the following parameters:

M_T = 4500 kg (Max observatory mass from MCR)
M_{SC} = 1500 kg (Max S/C mass to meet MCR Max observatory mass)
M_{SI} = 3000 kg (Max allowable instrument mass from AO)
h = 1.7 m (The IMDC value for this parameter was 1831 mm)

LT = 1.5 m (Based on 6915 PAF, 10 ft Fairing, 4500 kg total mass)

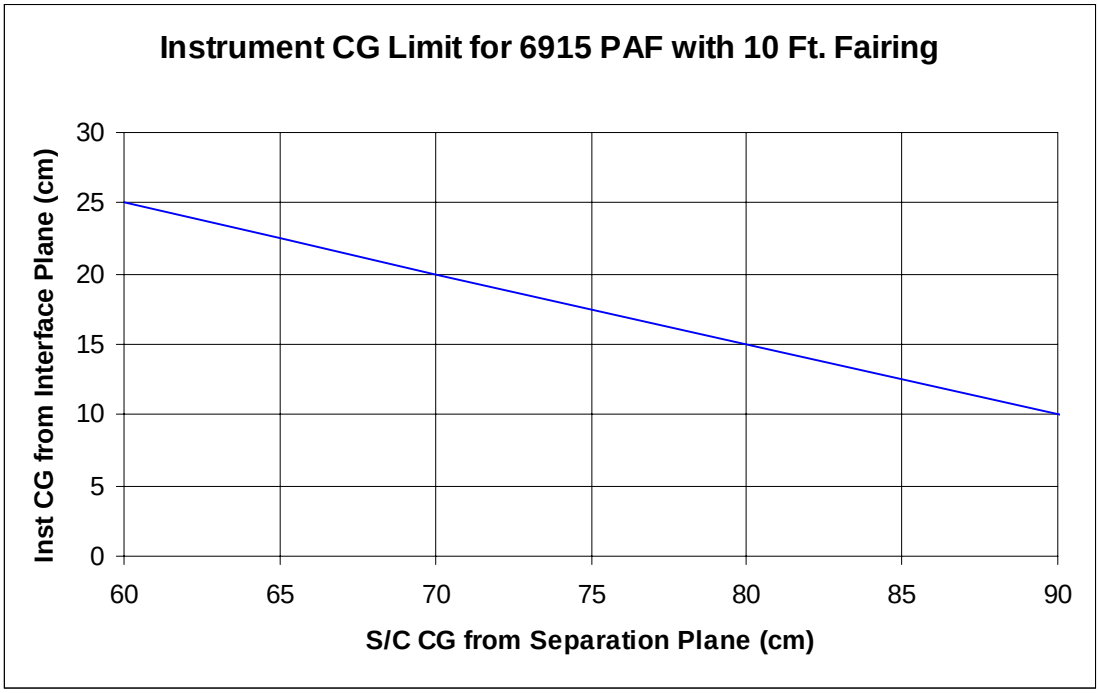

Figure 3-6. CG Limit

3.2.2.5 Clear Field of View

In the deployed configuration on orbit, the SI shall have a minimum clear field of view of 2π sr (TBR) centered on the Z-axis above the instrument mounting plane. The spacecraft shall not introduce any fixed material above this plane, such as solar array restraint mechanisms. The rotation envelope of the solar arrays shall be kept below the instrument-mounting plane.

3.2.2.6 Alignment

The on-orbit alignment between Star Tracker and SI shall remain within allowed error for the mechanical/thermal alignment component of Table 3-1.

3.2.2.7 Structural Design Requirements

3.2.2.7.1 Stiffness

3.2.2.7.1.1 Observatory

The fixed base stiffness of the SI-SC system shall produce a first mode frequency greater than 35 Hz, axial, and greater than 12 Hz, lateral.

3.2.2.7.1.2 SI

The fixed base stiffness of the SI shall produce a first mode frequency greater than TBD Hz, axial, and greater than TBD Hz, lateral.

3.2.2.7.1.3 SC

The fixed base stiffness of the SC shall produce a first mode frequency greater than TBD Hz, axial, and greater than TBD Hz, lateral.

3.2.2.7.2 Static Load Design

The design of SI primary structure shall use the quasi-static limit load factors in Table 3-2 applied at the center of gravity of the SI. Loads are given in units of gravitational acceleration, g = 9.81 m/s^2.

Table 3-2 Design Limit Loads

Axis \ Event	Liftoff/Transonic	MECO
Thrust	+3.25/-0.8	+6.0 ± 0.6
Lateral	± 4.0	± 0.1

Thrust and lateral loads shall be applied simultaneously in all combinations. In the thrust axis "+" indicates compression and "-" indicates tension.

The design of secondary structure and components shall use a limit load factor of ± 12.0 g applied to each axis independently.

3.2.2.7.3 Factors of Safety

Factors of safety are multiplicative factors that are applied to limit loads to evaluate the yield and ultimate strength levels of the structural design. Guidelines for the appropriate use of factors of safety are given in the referenced GEVS-SE Rev A document.

3.2.2.7.4 Component Evaluation Random Vibration

The evaluation of components shall use the generalized random vibration power spectral density in GEVS-SE.

3.2.2.7.5 Acoustics

The acoustic spectrum is given in GEVS-SE for the Delta II launch vehicle.

3.2.2.7.6 Pyroshock

The pyroshock spectrum is given in GEVS-SE for the Delta II launch vehicle.

3.2.2.7.7 Finite Element Model

Finite element models of the SI and of the SC shall be delivered electronically during project formulation to the GLAST Project Office at GSFC. These models are required in order to perform a preliminary coupled loads analysis.

3.2.3 Thermal

3.2.3.1 SI Thermal Design

The design and performance of the thermal system of the SI shall be the responsibility of the SI contractor. The SI thermal system shall include the radiating surfaces of the SI module itself as well as any additional radiating surfaces that are located on the SC module and the thermal links from them to the SI module. Thermal design shall be based on the conductance of dedicated thermal links and shall not rely on the conductance of the instrument interface structure.
Preliminary thermal design shall use the environmental parameters of Table 3-3.

Table 3-3 Thermal Design Parameters

Thermal Flux Source	Hot Case	Cold Case
Solar Constant	1419 W/m^2	1286 W/m^2
Albedo Factor	0.40	0.25
Earth IR	265 W/m^2	208 W/m^2

3.2.3.2 SI Radiator Accommodations

The SC shall provide physical accommodation for the additional radiating surfaces (SI radiator) and for the thermal links between radiator and SI.

3.2.3.2.1 Mounting

The SC shall provide mounting brackets, mounting isolation, and physical envelope as required for the SI radiator and thermal links.

3.2.3.2.2 Field of View

The SC shall provide the SI radiator with a minimum field of view of TBD (2π) sr centered on the radiator normal.

3.2.3.3 Thermal Models

A simplified thermal model shall be delivered by the SI contractor and by the SC contractor to GSFC during the formulation period for system analysis of pointing constraints.

3.2.3.4 SI Electronics Boxes

Thermal control of any SI electronics boxes that are located within the SC volume shall be the responsibility of the SC provider. This includes the specification of surface finishes and coatings, mounting interface conductance, external surface mounted heaters and temperature sensors.

3.2.3.4.1 Interface Temperature Ranges

The interface temperature of the SI electronics boxes shall be controlled to –10°C to +40°C (TBR) operating, and –55°C to +60°C (TBR) survival.

3.2.4 Electrical

3.2.4.1 Bus Voltage

The bus voltage supplied to the SI shall be 28 V +/- 6 V as seen at the input terminals of the SI.

3.2.4.2 Power Constraint

The maximum, orbit-averaged, power dissipation of the SI shall be constrained to 650 W.

3.2.4.3 Primary Power Distribution

The SC shall provide 2 switched services, prime and redundant, to the SI. These services are mutually exclusive in that only one is active at a time. However, the design of the SI shall preclude damage to the SI if both services are active at the same time. The design of the SI shall also preclude damage to the SI if power is removed instantaneously without warning.

3.2.4.4 Isolation

The SI shall provide secondary power converters that isolate secondary from primary power returns. Secondary returns shall be isolated by > 10 MΩ from primary returns.

3.2.4.5 Grounding

The Observatory shall employ a "soft grounded" primary ground system with multiple connections in the secondary systems. Figure 3-7 shows the configuration of the ground system. Observatory structure or an electrically conductive ground plane, known as chassis ground, shall provide the ground reference. The primary power system shall be isolated from chassis ground at dc by 2 kΩ resistance(s) and at ac by an impedance of TBD kΩ. Secondary loads shall each be referenced to chassis ground by a single connection. The chassis ground system shall not be used to conduct load current. The maximum ungrounded surface area, e.g., for MLI, shall be < 10 cm^2 (TBR).

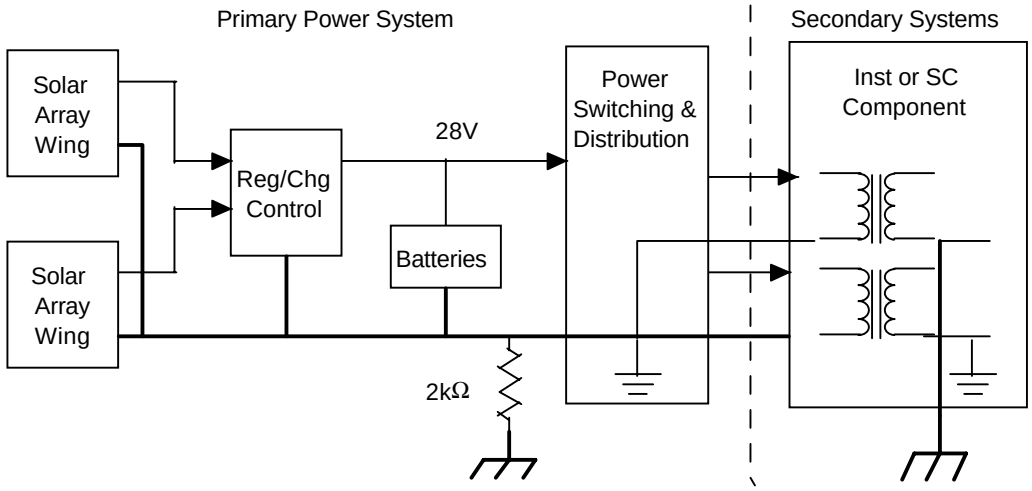

Figure 3-7. Single Reference Ground System with Multiple Connections

3.2.4.6 EMC

Per GEVS-SE/461

3.2.4.7 Time Distribution

The SC shall distribute a 1 pulse per second signal via dedicated hard wire to the SI with an accuracy of 1 μs rms. This hard wire signal will be redundant.

3.2.4.8 Analog Signals

The SC shall monitor a limited number, <8, (TBR) of prime and redundant analog signal sources related to the health and safety of the SI. These signals will include SI-SC interface temperatures, power service currents and voltages, and power-off internal temperatures of the SI. These signals also will be included in SC housekeeping data. The SI shall monitor any other temperatures, currents, and voltages from sources that are internal to the SI. That is, the SI shall generally perform signal conditioning, multiplexing, digitizing, comparing, and telemetry formatting of its own instrumentation.

3.2.4.9 Discrete Control Signals

The SC shall provide a limited number, <8, (TBR) of prime and redundant discrete control signals to the SI for the purpose of power configuration and on-off control.

3.2.5 Command Interface

3.2.5.1 Hardware Requirements

A dual redundant Mil Std 1553B or AS 1773 (TBR) data bus shall be used as the command/response bus between the SC Command and Data Handling Subsystem (CDHS) and the SI. The SC and SI operate in a master-slave relationship, respectively, on this bus. Only one side of the bus is active at a time. A single Remote Terminal address shall be assigned to the SI.

3.2.5.2 Software Requirements

3.2.5.2.1 Data Format

Commands and telemetry data that are transferred over the command/response bus shall be formatted as CCSDS source packets. The SC will support no segmentation or grouping services.

3.2.5.2.2 SI Command/Response Data

This section addresses the specific transactions that coordinate SI-SC operations.

3.2.5.2.2.1 Housekeeping Data from SI

The SC CDHS shall periodically request a spacecraft-specific housekeeping data set from the SI. This data set shall contain all of the SI parameters and configuration settings that the SC requires for auxiliary on-board monitoring of SI operation and safety and that the Mission Operations Center requires for monitoring in real time S-band data. These data will be stored with SC housekeeping data as down link telemetry.

3.2.5.2.2.2 Time Distribution to SI

The SC CDHS shall issue a time message that gives Universal Coordinated Time (UTC) at the 1 PPS signal. This message will be issued 50 to 100 ms (TBR) prior to the transition of the1 PPS signal.

3.2.5.2.2.3 Ancillary Data To SI

The SC shall send ancillary data to the SI. The inclusion of these data by the SI in the ancillary data field of science data telemetry will contribute to making the event data packets self-contained with respect to data processing on the ground. The ancillary data that are external to the SI include the following items of data.

3.2.5.2.2.3.1 Attitude

The SC CDHS shall acquire a time tagged attitude vector from the SC Attitude Control Subsystem (ACS) at the attitude control loop rate of 5 Hz (TBR) and transmit it to the SI.

3.2.5.2.2.3.2 Orbit Position Vector

The SC CDHS shall continually acquire GPS data, request the ACS to determine orbit position, and transmit it to the SI.

3.2.5.2.2.3.3 Observation ID

Other ancillary data, such as observation ids that are generated on the ground, shall be forwarded by the SC CDHS in the data field of SC commands to the SI.

3.2.5.2.3 SI Configuration Commands, Table Loads

The SI shall be configured by individual commands that convey configuration data as well as by commands that invoke loads of data from stored tables.

3.2.5.2.4 SI Software Loads and Dumps

The SI software shall be re-programmable via software load commands. Companion commands shall allow dumps from SI memory of program memory as well as data memory.

3.2.5.2.5 Observatory Pointing Commands

3.2.5.2.5.1 Real Time Pointing Commands

Observatory pointing shall be command-able by real time commands from the ground. This capability will be used in early-orbit checkout and in contingency operations in which continuous communications are maintained with the observatory through TDRSS. Real time pointing commands will also be used in normal operations via the TDRS demand access service for coordinated observations with other observatories.

3.2.5.2.5.2 SC Pointing Control

Normally, observatory pointing is performed in 2 modes, the Sky Survey Mode and the Pointed Observation Mode. In the Sky Survey Mode, the observatory shall point autonomously under ACS control. In the Pointed Observation Mode, the observatory

shall point under control of time tagged commands that execute from CDHS command storage.

3.2.5.2.5.3 Transient Event Control

The SI pointing control mode shall be enabled/disabled by SC command. When enabled, the SC shall accept a pointing command to the ACS that supercedes the last SC generated pointing for a certain time duration in either of the SC pointing control modes. The time duration shall be a command-able SC parameter.

3.2.5.2.6 GRB Alerts to Ground

Upon recognition of a Gamma-Ray Burst (GRB), the SI shall request the SC CDHS to issue an alert message immediately to the ground. This request shall contain the pointing direction of the GRB in J2000 coordinates. The SC CDHS shall issue a transient event pointing command to the SC ACS that contains the direction and duration of the transient event.

3.2.5.2.7 Target of Opportunity Command from Ground

Upon receipt of a real time ground command requesting a transient event pointing command in J2000 coordinates, the SC CDHS shall issue a transient event pointing command to the SC ACS that contains the direction and duration of the transient event.

3.2.6 Science Telemetry Interface

3.2.6.1 Hardware Requirements

The SI shall output its telemetry, both engineering data and science data, via a conventional RS-422 based interface with a Solid State Recorder (SSR) in the SC.

3.2.6.1.1 Interface Data Rates

The SI-SC data rate shall be no greater than 70 Mbps (TBR). The maximum averaged raw data rate (unprocessed science data) over a 1 orbit period (95.65 min) shall be 17.4 Mbps (TBR). The maximum averaged data rate (processed science data) over a 24 hour period shall be 300 kbps.

3.2.6.1.2 Electrical Connections

The number and type of electrical connections is TBD.

3.2.6.2 Software Requirements

3.2.6.2.1 Protocol

The protocol for coordinating data transfers and for ensuring their reliability is TBD.

3.2.6.2.2 Data Format

The SI shall packetize its science data using variable length CCSDS source packets up to a maximum length of 64 (TBR) kBytes.

3.2.6.2.3 Packet Generation

The SI shall be responsible for generating source packets for each of its data types, such as normal event data, calibration event data, cosmic ray data, SI engineering data, diagnostic data including memory dump data, etc.

3.2.6.2.4 Merging Ancillary Data

The SI shall be responsible for merging ancillary data from different sources. Some ancillary data shall be generated in the SI, and some shall be received from the SC as command data.

3.2.6.2.5 Packet Storage and Transmission

The SC shall manage the storage and transmission of source packets. This includes virtual channel multiplexing, error encoding, and data unit framing. It also includes holding source packets as needed for retransmission on the next orbit or next day and the subsequent release of storage for new data.

3.2.7 Fault Protection

3.2.7.1 Fault Tolerance

The Observatory shall be single fault tolerant. SC and SI systems shall be designed with redundant circuits or alternate paths that can be employed in response to a fault.

3.2.7.2 Fault Detection and Correction

The Observatory shall perform on board fault detection and correction. Faults will be classified according to those that can be corrected autonomously and those that require ground intervention.

3.2.7.3 SI Internal Faults

The SI shall monitor itself for internal faults and shall manage its internal redundancy configuration.

3.2.7.4 SI Interface Faults

The SC shall monitor the SI interfaces and shall manage the interface configuration (principally A/B sides of Power, Command/Response Bus, and Science Data Interface).

3.2.7.5 Load Shedding

The Observatory will implement a Safe Mode in response to mission critical faults that can not be resolved without ground intervention. In these cases the SI will be subject to load shedding without warning.

3.3 Space Environmental Estimates

3.3.1 Charged Particle Radiation

This section gives the total dose and single event upset (SEU) requirements for the charged particle radiation environment.

3.3.1.1 Total Dose

The total dose for a 5-year mission in the GLAST orbit, beginning in 2005, is given by the dose-depth curve in Figure 3-8.

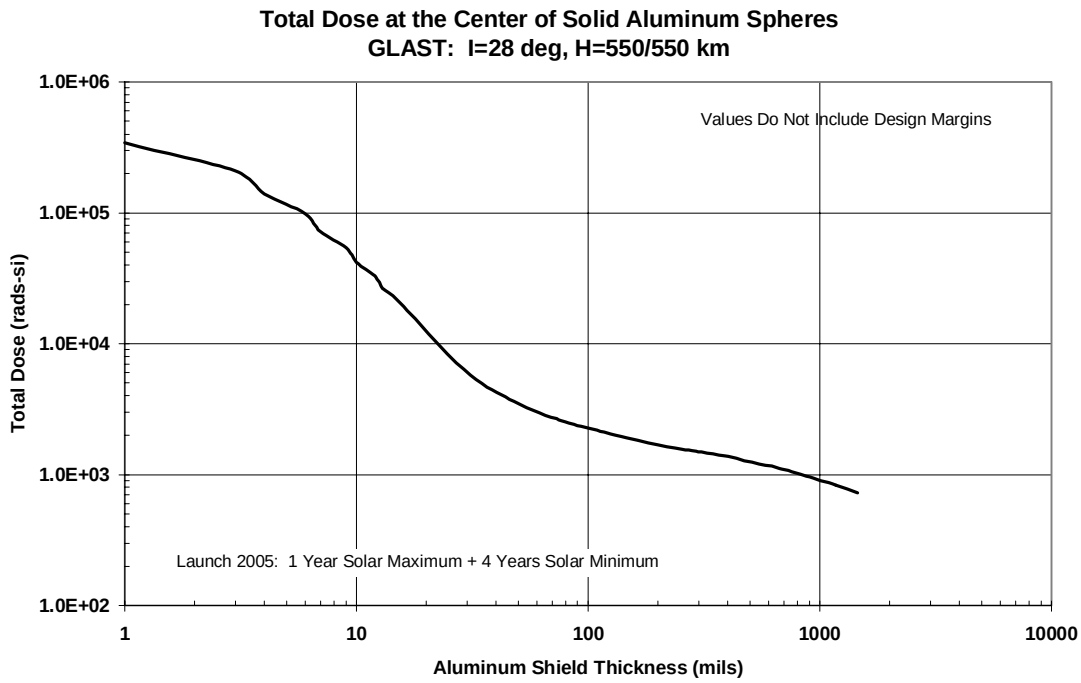

Figure 3-8. Total Dose-Depth Curve.

3.3.1.2 Total Dose Design Margin

A multiplicative factor of 2 shall be applied to the total dose estimate for estimate uncertainty, and an additional factor of 2.5 (TBR) shall be applied to achieve an overall design margin of 5. Shielding shall be designed and parts chosen to yield the required design margin.

3.3.1.3 LET Spectrum

The LET energy spectrum for direct ionization by heavy ions is given in Figure 3-9.

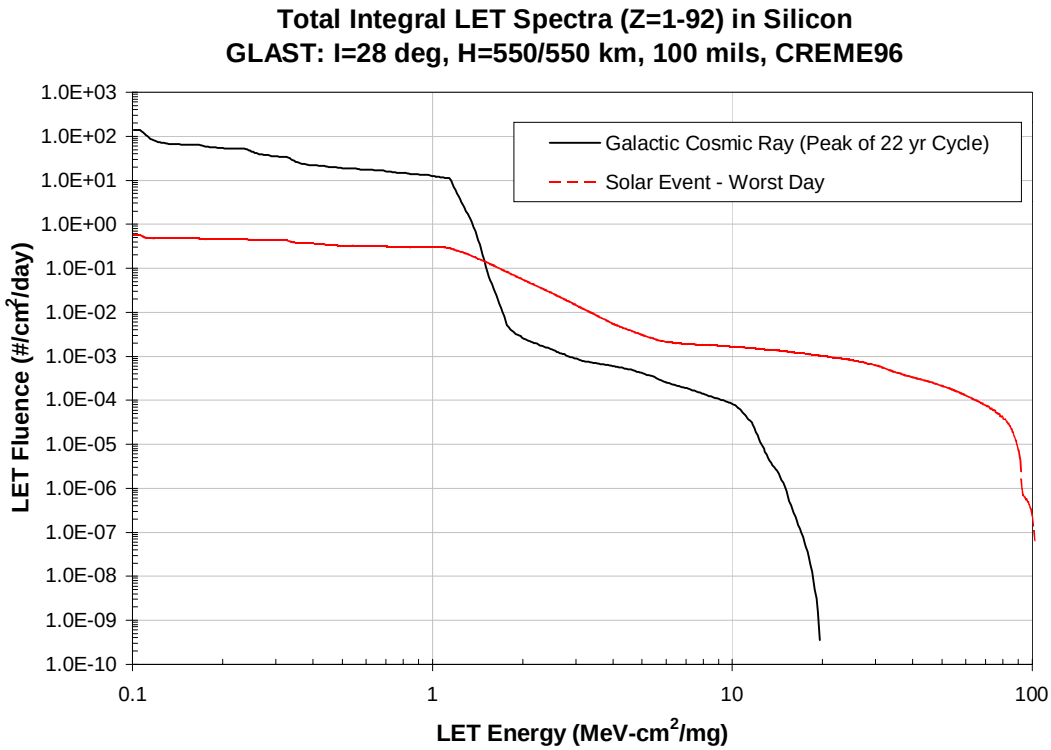

Figure 3-9. LET Spectra.

3.3.1.4 Single Event Effects Immunity

Electronic parts shall be selected for immunity to single event effects. All parts shall be selected for immunity to single event latch-up. A linear energy threshold of 8 MeV/mg/cm^2 (TBR) shall be used as a guideline to select parts for reasonably low probability to single event upset due to proton induced secondary.

3.3.2 Meteoroid and Debris Flux

3.3.2.1 Meteoroid Flux

Figure 3-10 gives the meteoroid flux at 550 km. The meteoroid environment encompasses only particles of natural origin. The average mass density for all meteoroids is 0.5 grams (g) per cubic centimeter, and the average velocity for all meteoroids is 20 kilometers per second. The meteoroid flux is from the NASA SSP-30425 (1991) model that can be found at http://envnet.gsfc.nasa.gov.

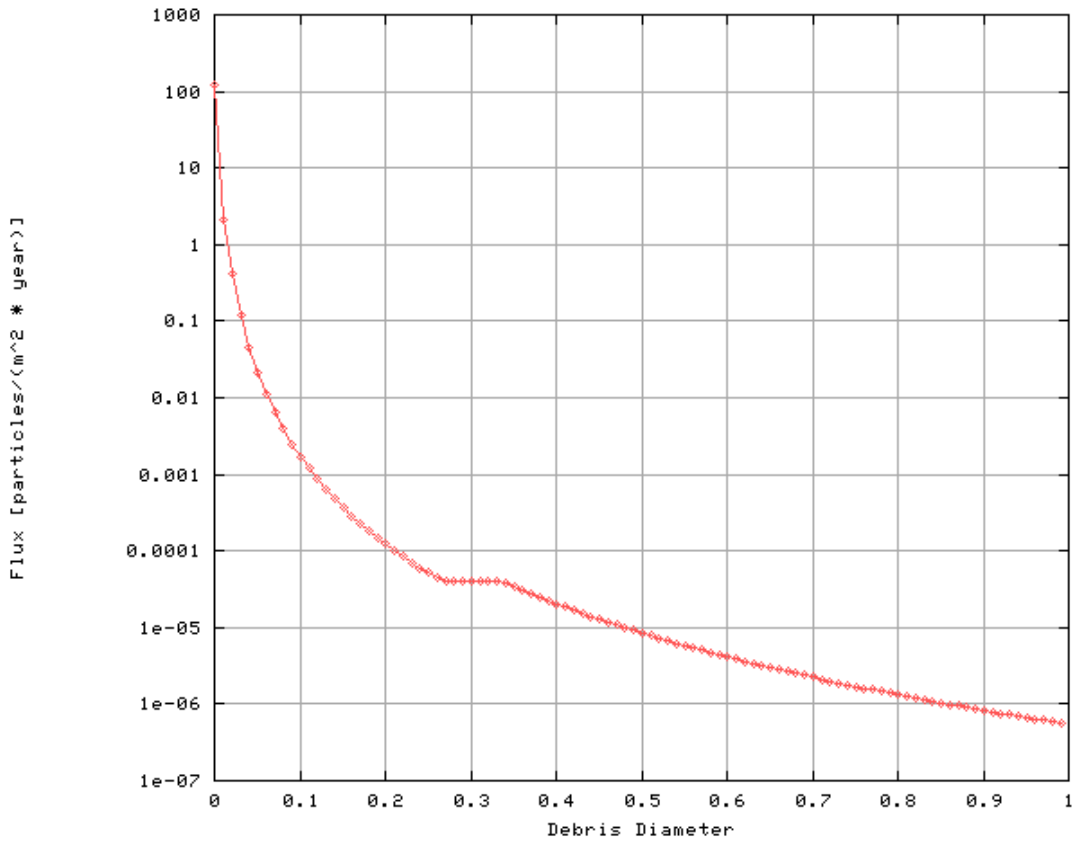

Debris Diameter is in cm.
Figure 3-10. Meteoroid Environment at 550 km.

3.3.2.2 Debris Flux

Figure 3-11 gives the debris flux at 550 km. The orbital debris environment is composed of residue from man-made satellites and launch vehicles. The average velocity for objects smaller than 1 centimeter is 10 km/sec, and the average mass density is 2.8 g/cm^3. This flux is from the Orbital Debris Model, also found at http://envnet.gsfc.nasa.gov. It was run with the following parameters:

Debri Diameter (cm) varied,
Altitude 550 km,
Inclination 28.5 degree,
Year 2005,
Traffic Growth Rate 5%,
Small Object Growth Rate 2%,
Solar Flux 147.13.

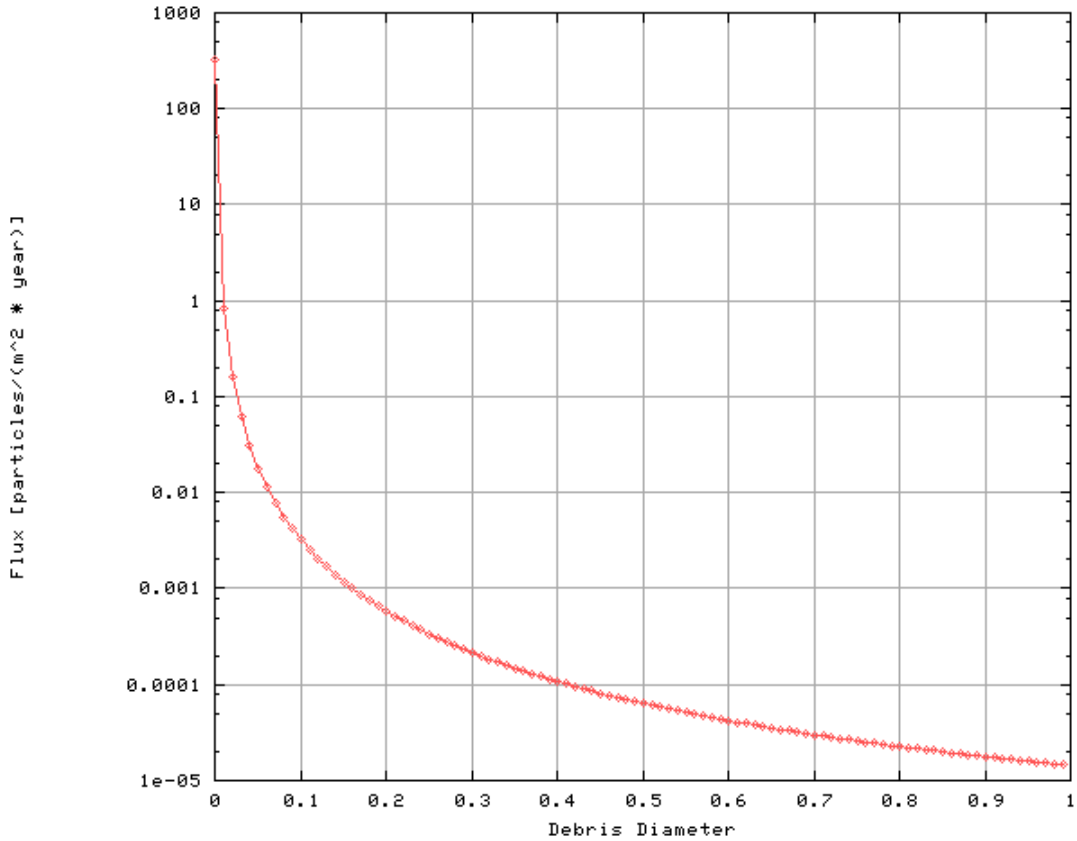

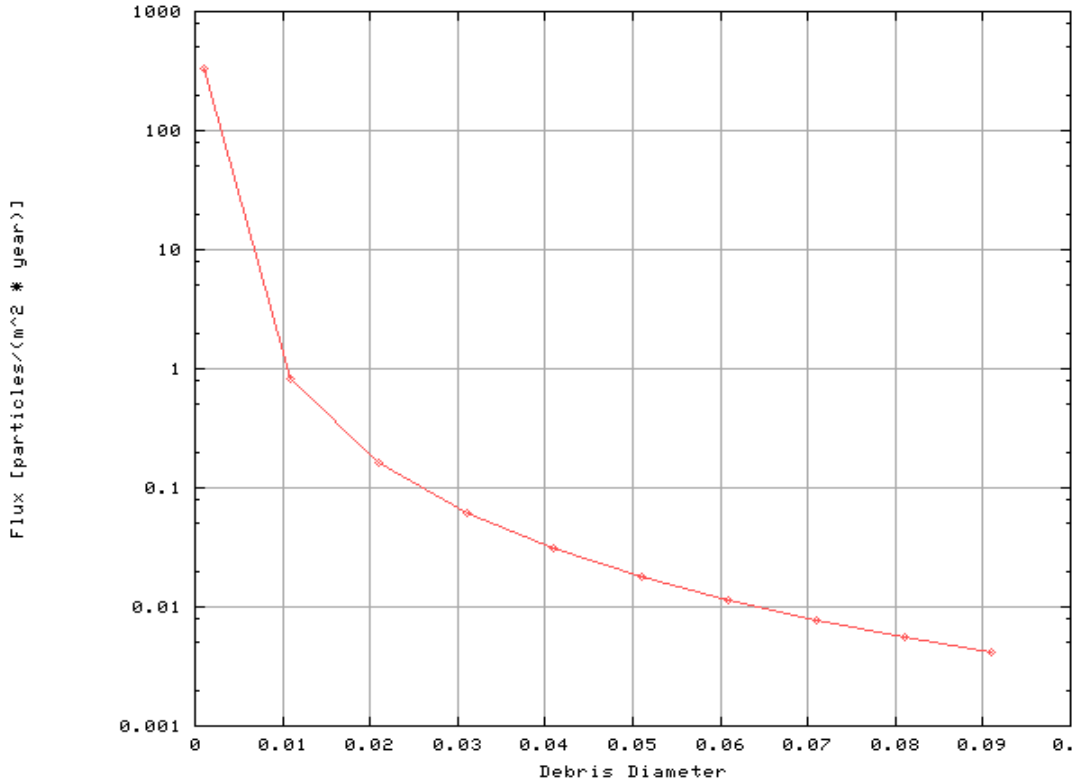

Debris Diameter is in cm.
Figure 3-11. Debris Environment at 550 km.